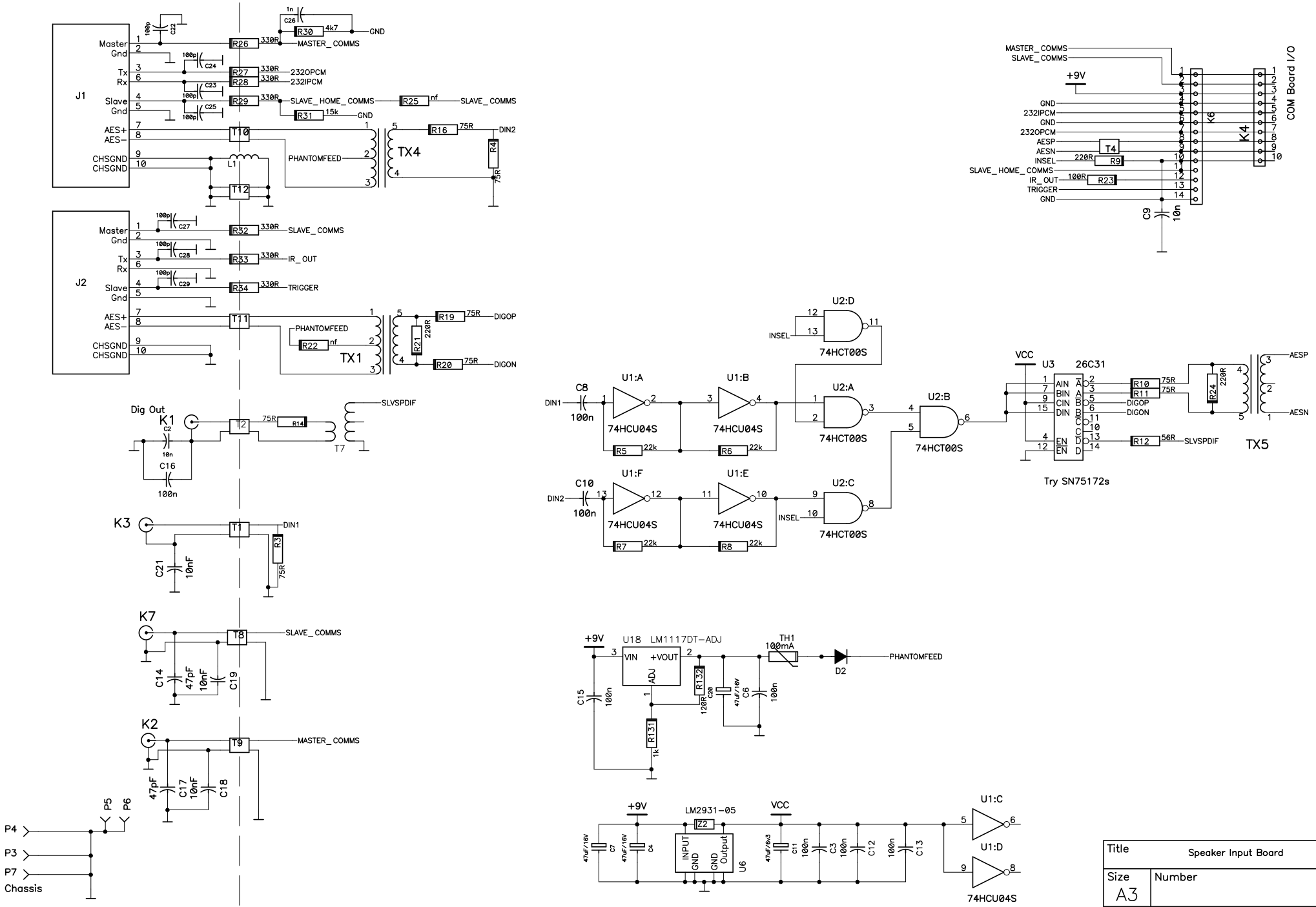

Title	Speaker Input Board	
Size A3	Number	Rev
Date 02-08-07		Drawn by PSM
Filename 5k2inputV6.sch		Sheet 1 of 2